Electric motors

FAN COVER FOR ELECTRIC MOTORS

IEC/MEC 71 VP 4F

MATERIALS

DC04 Raw sheet metal
DX54 Hot-dip galvanised sheet

FINISHING

Zinc-plating
Painting (RAL9005)
(Other colours are available on request)
Phosphodegreasing

RENDER

IEC/MEC 71 VP 4F

TECHNICAL DRAWING

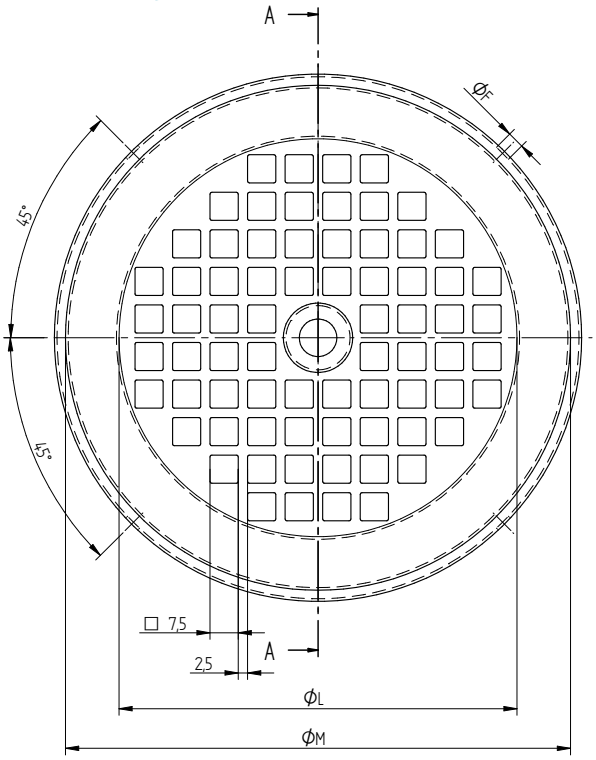

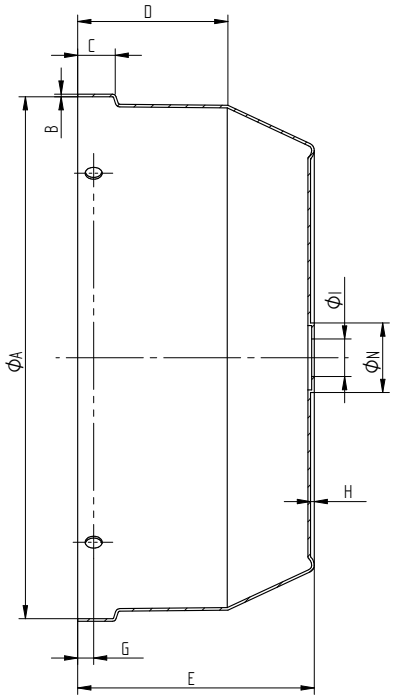

SECTION A-A

TECHNICAL DATA

Code	Dimension Description	Type VP 4F
A	Ø	138,9
B	Steel Thickness	0,7
C	Bar Height	10
D	Side Height	40
E	Total Height	63
F	Ø Fixing Holes	4,5
G	Hole's Distance	3,7
H	Lowering Grill Height	1
I	Central Hole	8
L	Ø Grill	106
M	Ø Internal	135,5
cm^2	Air Flow Section	40,5
N	Central Blanking	18,5

Customizable on request

PACKING

Single Packing Dimensions	mm	790 x 580 x 308 h
Pieces for box	n.	230
Box weight	kg	43,4

L.E.B. S.p.A. | Via Antonio Pacinotti 34 – 36040 Brendola (VI)
Tel. 0444 400668 – Fax 0444 400829
infoleb@leb.it | *www.leb.it*

REV. 09/21